Delta

BACK-TO-WALL ACRYLIC BATH, 1500MM

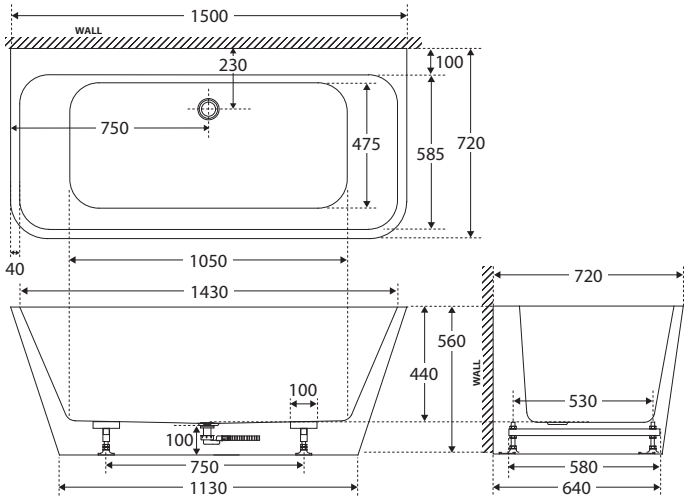

Features

- Back-to-wall design
- Flush against the wall for easy cleaning
- Gloss white finish
- Chrome pull-out/pop-up waste included
- Made from UV stabilised, premium sanitary-grade acrylic with Lucite MMA
- No overflow
- Built-in steel support frame
- Adjustable self-supporting feet
- Capacity: 230L
- Net weight: 38 kg
- Gross weight: 44 kg

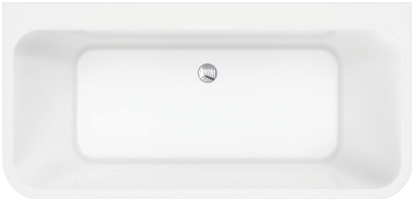

Available in

Gloss White

FR13572-1500

Cleaning & Care

- Regularly clean with mild soapy water using a microfibre cloth. Weekly cleaning is recommended.
- Do not use harsh detergents, bleach, cream cleansers, window cleaning sprays, or citrus based cleaners.
- Do not use undue pressure and wipe in one direction only.
- If using coloured essential oils, test in an inconspicuous area with water to ensure they won't stain the bath. Always add oils to a bath full of water.

We aim to ensure that specifications are correct at the time of publication. All measurements are shown in millimetres. Always use measurements of actual product received for final specification as the technical drawing may contain differences. Due to printing limitations, physical colour may vary from the image shown. Fienza reserves the right to make modifications without prior notice.